5. Dimensional Drawings
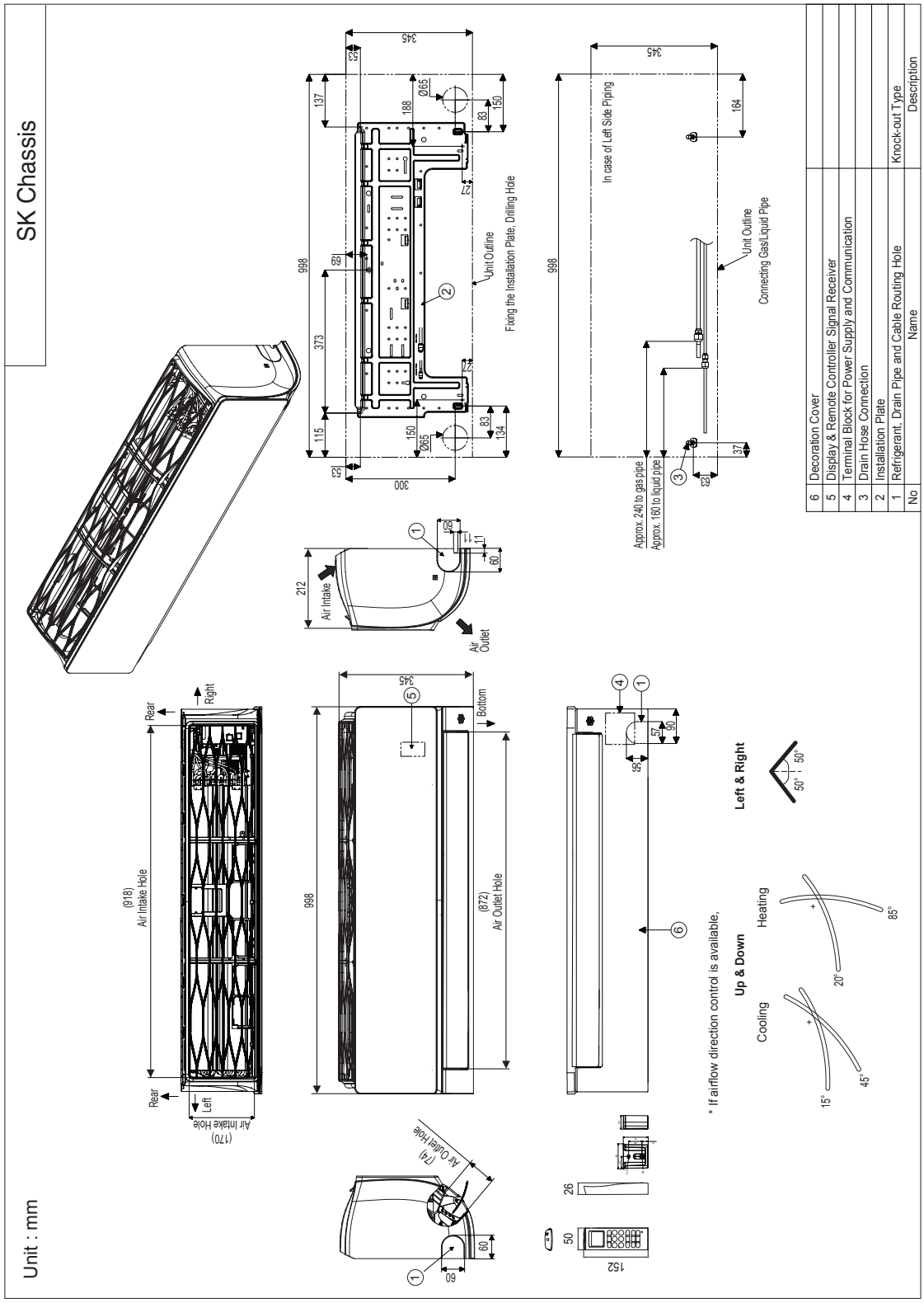
AC18BQ (S3NM18KLRZA)